15” HIGH BRIGHTNESS TFT – LCD

MODEL : SP150X2-L01

Customer : _____

Approved by : _____

Note : All information in this technical data sheet is preliminary and subject to change without notice.

- CONTENTS -

REVISION HISTORY ---------- 3

1. GENERAL DESCRIPTION ---------- 4
- 1.1 OVERVIEW
- 1.2 FEATURES
- 1.3 APPLICATION
- 1.4 GENERAL SPECIFICATIONS
- 1.5 MECHANICAL SPECIFICATIONS

2. ABSOLUTE MAXIMUM RATINGS ---------- 5
- 2.1 ABSOLUTE RATINGS OF ENVIRONMENT
- 2.2 ELECTRICAL ABSOLUTE RATINGS
  - 2.2.1 TFT LCD MODULE
  - 2.2.2 BACKLIGHT UNIT

3. ELECTRICAL CHARACTERISTICS ---------- 7
- 3.1 TFT LCD MODULE
- 3.2 BACKLIGHT UNIT

4. BLOCK DIAGRAM ---------- 9
- 4.1 TFT LCD MODULE
- 4.2 BACKLIGHT UNIT

5. INPUT TERMINAL PIN ASSIGNMENT ---------- 10
- 5.1 TFT LCD MODULE
- 5.2 BACKLIGHT UNIT
- 5.3 COLOR DATA INPUT ASSIGNMENT

6. INTERFACE TIMING ---------- 12
- 6.1 INPUT SIGNAL TIMING SPECIFICATIONS
- 6.2 POWER ON/OFF SEQUENCE

7. OPTICAL CHARACTERISTICS ---------- 15
- 7.1 TEST CONDITIONS
- 7.2 OPTICAL SPECIFICATIONS

REVISION HISTORY

Rev.No.	Date	Page	Description
Ver 1.0	August 21, 2006	All	Preliminary Specification was first issued.

1. GENERAL DESCRIPTION

1.1 OVERVIEW

SP150X2-L01 is a 15" TFT Liquid Crystal Display module with 2CCFL Backlight units and 20 pin LVDS interface. This module supports 1024 x 768 (XGA) mode and can display 16M colors.
The PSWG is to establish a set of displays with standard mechanical dimensions and select electrical interface requirements for an industry standard 15.0" XGA LCD panel and the inverter module for Backlight is not built in.
It is designed for sunlight readable applications.(AR/AG)

1.2 FEATURES

- XGA(1024 x 768 pixels) resolution
- PSWG
- Wide operating temperature
- Anti-Reflection / Anti-Glare

1.3 APPLICATION

- Outdoor Advertisement
- Gas-Station
- Outdoor Information Kiosk

1.4 GENERAL SPECIFICATIONS

ITEM	SPECIFICATION	UNIT	NOTE
Active Area	304.128(H) x 228.096(V) (15.0" diagonal)	mm	(1)
Bezel Opening Area	307.4(H) x 231.3(V)	mm	
Driver Element	a-Si TFT active matrix	-	
Pixel Number	1024 x R.G.B. x 768	Pixel	
Pixel Pitch	0.297(H) x 0.297(W)	mm	
Pixel Arrangement	RGB vertical stripe	-	
Display Color	16,2M	Color	
Display Mode	Normally white	-	
Surface Treatment	Hard-coating 3H, AR / AG	-	

1.5 MECHANICAL SPECIFICATIONS

ITEM		MIN.	TYP.	MAX.	UNIT	NOTE
Module Size	Horizontal(H)	326.0	326.5	327	mm	(1)
	Vertical(V)	253.0	253.5	254	mm	
	Depth(D)	-	-	14.35	mm	(1)
Weight		-	-	1080	g	

NOTE (1) Please refer to the Appendix A for more information of front and back outline dimensions.

2. ABSOLUTE MAXIMUM RATINGS

2.1 ABSOLUTE RATINGS OF ENVIRONMENT

ITEM	SYMBOL	VALUE		UNIT	NOTE
		MIN.	MAX.		
Storage Temperature	T_{ST}	-40	+80	°C	(1)
Operating Ambient Temperature	T_{OP}	-30	+70	°C	(1),(2)
Shock (Non-Operating)	S_{NOP}	-	50G	G	(3),(5)
Vibration (Non-Operating)	V_{NOP}	-	1.5	G	(4),(5)

NOTE(1) Temperature and relative humidity range is shown in the figure below.
(a) 90%RH MAX. ($T_A \leq 40°C$).
(b) Wet-bulb temperature should be 39°C Max. ($T \geq 40°C$)
(c) No condensation of water.

NOTE(2) The temperature of panel surface should be -30°C Min. and 80°C Max.

NOTE(3) 11ms, 1 time each ±X, ±Y and ±Z directions.

NOTE(4) 10 ~ 500Hz, 1 cycle/20min. 1.5mm max, 1 hour each X, Y and Z directions.

NOTE(5) At testing Vibration and Shock, the fixture in holding the module has to be hard and rigid enough so that the module would not be twisted or bent by the fixture.

Operation Diagram

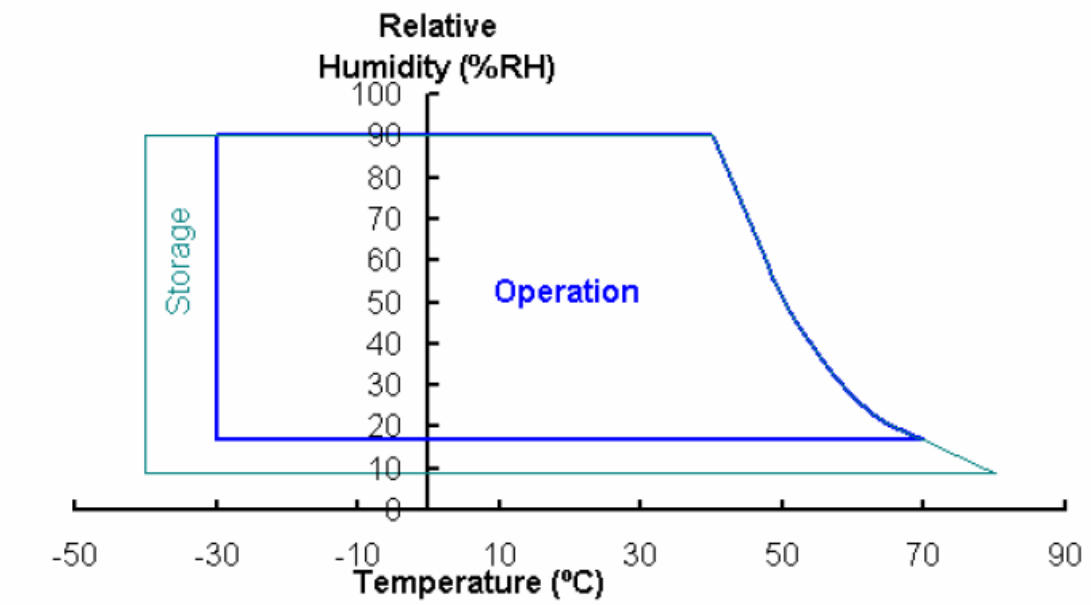

2.2 ELECTRICAL ABSOLUTE RATINGS

2.2.1 TFT LCD MODULE

ITEM	SYMBOL	VALUE		UNIT	NOTE
		MIN.	MAX.		
Power Supply Voltage	V_{DD}	-0.3	4.0	V	

2.2.2 BACKLIGHT UNIT

ITEM	SYMBOL	VALUE		UNIT	NOTE
		MIN.	MAX.		
Lamp Voltage	V_L	522	638	V_{RMS}	(1),(2) I_L =8.0mA,
Lamp Current	I_L	-	8.0	mA_{RMS}	(1),(2)
Lamp Frequency	F_L	40	80	KHz	

NOTE(1) Permanent damage to the device may occur if maximum values are exceeded. Function operation should be restricted to the conditions described under Normal Operating Conditions.

NOTE(2) Specified values are for lamp (Refer to Section 3.2 for further information).

3. ELECTRICAL CHARACTERISTICS

3.1 TFT LCD MODULE (1)

PARAMETER	SYMBOL	VALUE			UNIT	NOTE
		MIN.	TYP.	MAX.		
Power Supply Voltage	V_{DD}	3.0	3.3	3.6	V	-
Ripple Voltage	V_{RP}	-	-	100	mV_{p-p}	
Rush Current	I_{RUSH}	-	-	2.0	Apeak	(2)
Power Supply Current	Icc	-	750	-	mA	
Power Consumption	Pc	-	2.48	-	Watt	

NOTE(1) The module should be always operated within above ranges.
NOTE(2) Measurement Conditions :

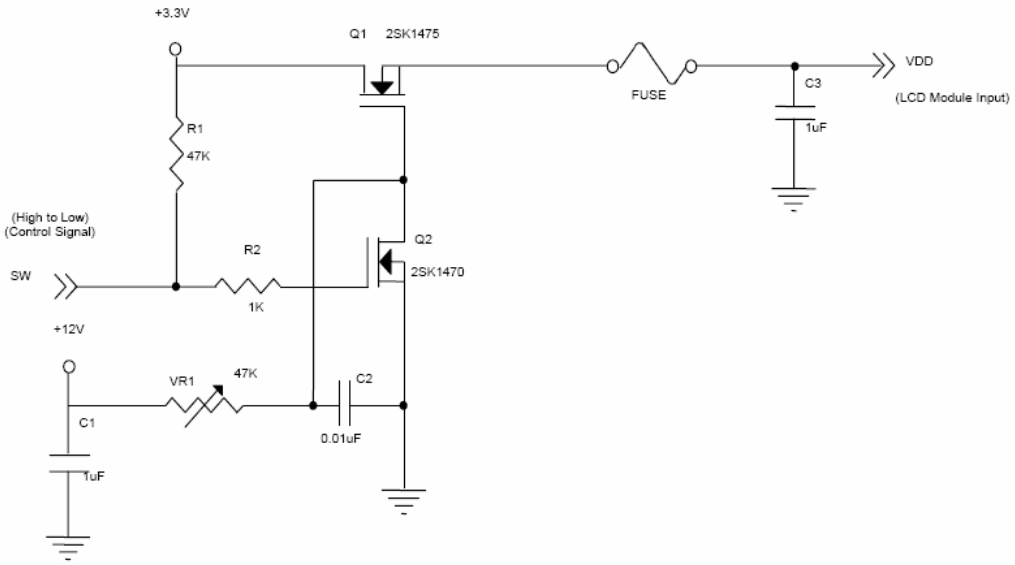

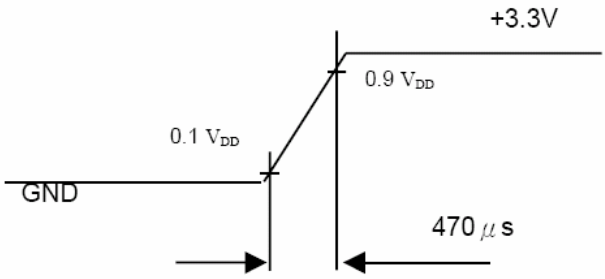

3.2 BACKLIGHT UNIT

PARAMETER	SYMBOL	VALUE			UNIT	NOTE
		MIN.	TYP.	MAX.		
Lamp Input Voltage	V_L	522	580	638	V_{RMS}	I_L =8.0mA
Lamp Current	I_L	-	8.0	-	mA_{RMS}	(1)
Starting Voltage	V_S	-	-	1400	V_{RMS}	0°C (2)
		-	-	1210	V_{RMS}	25°C(2)
Operating Frequency	F_L	40	-	80	KHz	(3)
Lamp Life Time	L_{BL}	50000	-	-	Hrs	(5)
Power Consumption	P_L	-	9.28	-	W	(4), I_L =8.0mA

NOTE(1) Lamp current is measured by utilizing a high frequency current meter as shown below :

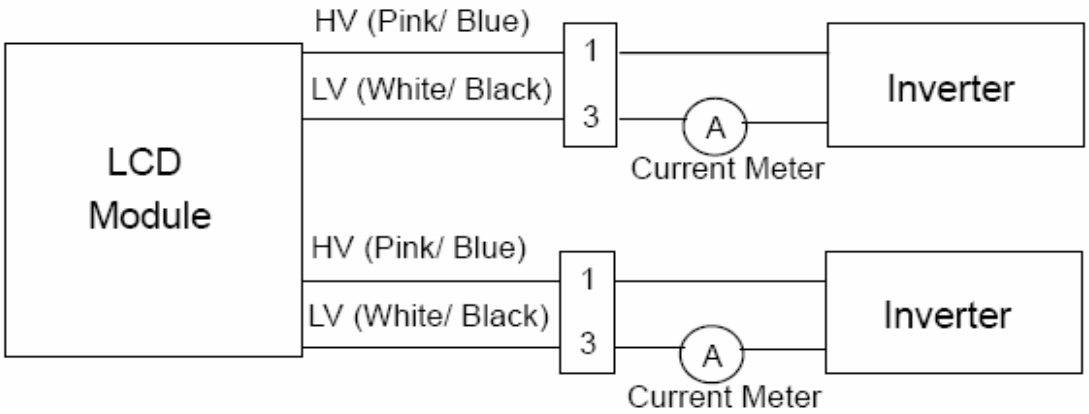

NOTE(2) The voltage shown above should be applied to the lamp for more than 1 second after startup. Otherwise the lamp may not be turned on.

NOTE(3) The lamp frequency may generate interference with horizontal synchronous frequency from the display, and this may cause line flow on the display. In order to avoid interference, the lamp frequency should be detached from the horizontal synchronous frequency and its harmonics as far as possible.

NOTE(4) $P_L = I_L \times V_L \times 2CCFL$

NOTE(5) The lifetime of lamp is defined as the time when it continues to operate under the conditions at $T_A = 25 \pm 2°C$ and $I_L = 8.0mA_{RMS}$ until one of the following events occurs :

(a) When the brightness becomes ≤50% of its original value.

(b) When the effective ignition length becomes ≤80% of its original value.(Effective ignition length is define as an area that the brightness is less than 70% compared to the center point.)

NOTE(5) The waveform of the voltage output of inverter must be area-symmetric and the design of the inverter must have specifications for the modularized lamp. The performance of the Backlight, such as lifetime or brightness, is greatly influenced by the characteristics of the DC-AC inverter for the lamp. All the parameters of an inverter should be carefully designed to avoid generating too much current leakage form high voltage output of the inverter. When designing or ordering the inverter please make sure that a poor lighting caused by the mismatch of the Backlight and the inverter (miss-lighting, flicker, etc.) never occurs. If the above situation is confirmed, the module should be operated in the same manners when it is installed in your instrument.

4. BLOCK DIAGRAM

4.1 TFT LCD MODULE

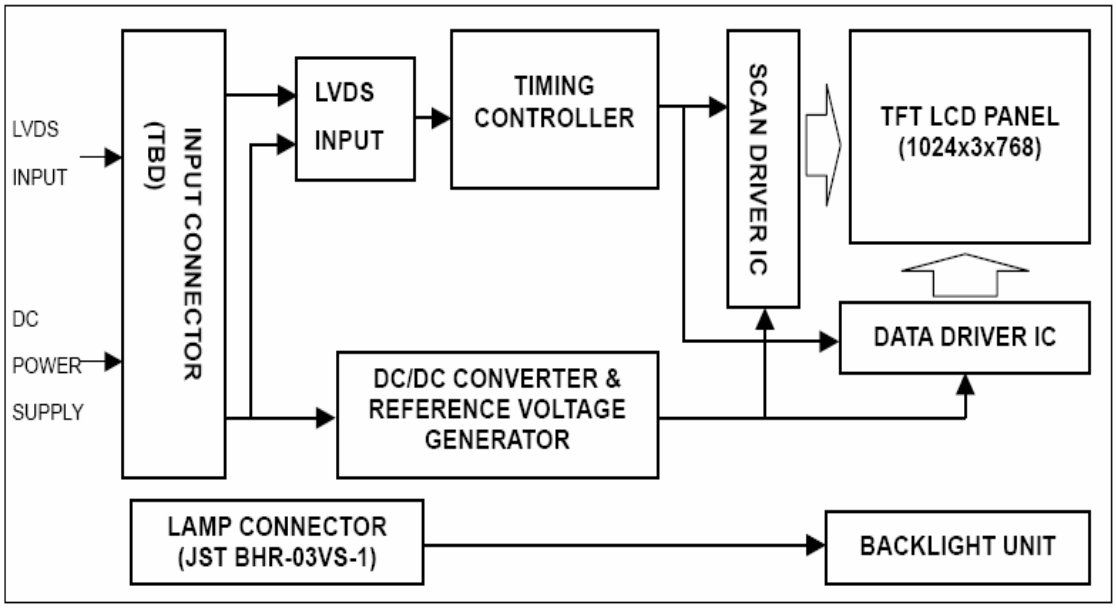

4.2 BACKLIGHT UNIT

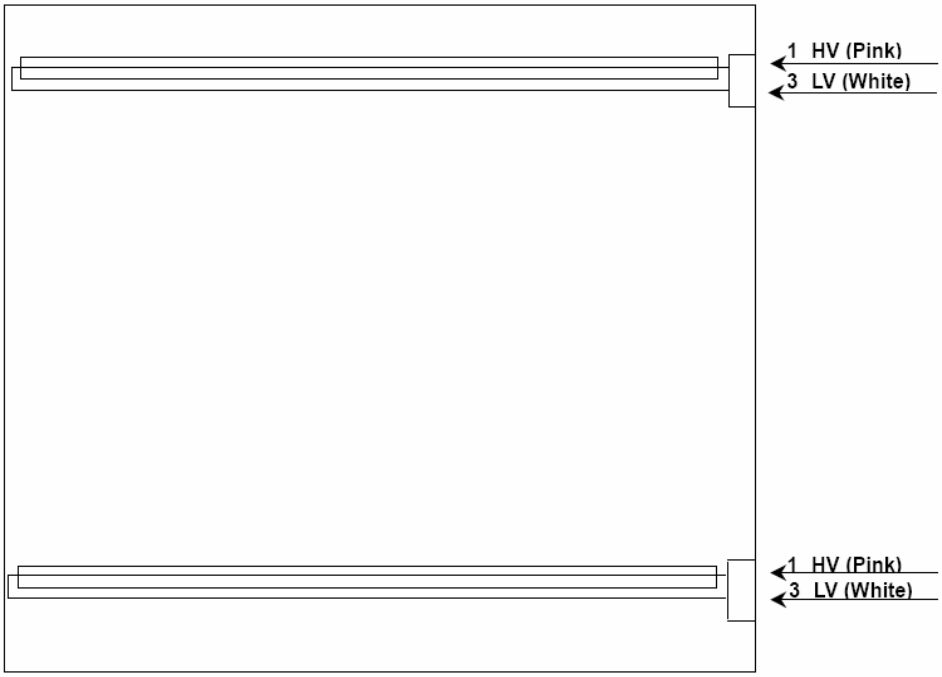

5. INPUT TERMINAL PIN ASSIGNMENT

5.1 TFT LCD MODULE

PIN NO.	SYMBOL	FUNCTION	POLARITY	NOTE
1	VDD	Power Supply +3.3V(typical)		
2	VDD	Power Supply +3.3V(typical)		
3	GND	Ground		
4	GND	Ground		
5	RX0-	LVDS Differential Data Input	Negative	
6	RX0+	LVDS Differential Data Input	Positive	
7	GND	Ground		
8	RX1-	LVDS Differential Data Input	Negative	
9	RX1+	LVDS Differential Data Input	Positive	
10	GND	Ground		
11	RX2-	LVDS Differential Data Input	Negative	
12	RX2+	LVDS Differential Data Input	Positive	
13	GND	Ground		
14	RXCLK-	LVDS Differential Data Input	Negative	
15	RXCLK+	LVDS Differential Data Input	Positive	
16	GND	Ground		
17	RX3-	LVDS Differential Data Input	Negative	
18	RX3+	LVDS Differential Data Input	Positive	
19	GND	Ground		
20	NC	Tied to ground		

NOTE(1) LCD connector (CN1). : [Hirose] DF-14H-20P-1.25H or equivalent

5.2 BACKLIGHT UNIT

PIN	SYMBOL	DESCRIPTION
1	HV	High Voltage
2	LV	Ground

NOTE(1) Connector Part No. : [JST] BHR-03VS-1 or equivalent

5.3 COLOR DATA INPUT ASSIGNMENT

The brightness of each primary color (red, green and blue) is based on the 8-bit gray scale data input for the color. The higher the binary input the brighter the color. The table below provides the assignment of color versus data input.

Color		Data Signal																							
		Red								Green								Blue							
		R7	R6	R5	R4	R3	R2	R1	R0	R7	R6	G5	G4	G3	G2	G1	G0	R7	R6	B5	B4	B3	B2	B1	B0
Basic Colors	Black	0	0	0	0	0	0	0	0	0	0	0	0	0	0	0	0	0	0	0	0	0	0	0	0
	Red	1	1	1	1	1	1	1	1	0	0	0	0	0	0	0	0	0	0	0	0	0	0	0	0
	Green	0	0	0	0	0	0	0	0	1	1	1	1	1	1	1	1	0	0	0	0	0	0	0	0
	Blue	0	0	0	0	0	0	0	0	0	0	0	0	0	0	0	0	1	1	1	1	1	1	1	1
	Cyan	0	0	0	0	0	0	0	0	1	1	1	1	1	1	1	1	1	1	1	1	1	1	1	1
	Magenta	1	1	1	1	1	1	1	1	0	0	0	0	0	0	0	0	1	1	1	1	1	1	1	1
	Yellow	1	1	1	1	1	1	1	1	1	1	1	1	1	1	1	1	0	0	0	0	0	0	0	0
	White	1	1	1	1	1	1	1	1	1	1	1	1	1	1	1	1	1	1	1	1	1	1	1	1
Gray Scale Of Red	Red(0) / Dark	0	0	0	0	0	0	0	0	0	0	0	0	0	0	0	0	0	0	0	0	0	0	0	0
	Red(1)	0	0	0	0	0	0	0	1	0	0	0	0	0	0	0	0	0	0	0	0	0	0	0	0
	Red(2)	0	0	0	0	0	0	1	0	0	0	0	0	0	0	0	0	0	0	0	0	0	0	0	0
	:	:	:	:	:	:	:	:	:	:	:	:	:	:	:	:	:	:	:	:	:	:	:	:	:
	:	:	:	:	:	:	:	:	:	:	:	:	:	:	:	:	:	:	:	:	:	:	:	:	:
	Red(252)	1	1	1	1	1	1	0	1	0	0	0	0	0	0	0	0	0	0	0	0	0	0	0	0
	Red(252)	1	1	1	1	1	1	1	0	0	0	0	0	0	0	0	0	0	0	0	0	0	0	0	0
	Red(252)	1	1	1	1	1	1	1	1	0	0	0	0	0	0	0	0	0	0	0	0	0	0	0	0
Gray Scale Of Green	Green(0)/Dark	0	0	0	0	0	0	0	0	0	0	0	0	0	0	0	0	0	0	0	0	0	0	0	0
	Green(1)	0	0	0	0	0	0	0	0	0	0	0	0	0	0	0	1	0	0	0	0	0	0	0	0
	Green(2)	0	0	0	0	0	0	0	0	0	0	0	0	0	0	1	0	0	0	0	0	0	0	0	0
	:	:	:	:	:	:	:	:	:	:	:	:	:	:	:	:	:	:	:	:	:	:	:	:	:
	:	:	:	:	:	:	:	:	:	:	:	:	:	:	:	:	:	:	:	:	:	:	:	:	:
	Green(252)	0	0	0	0	0	0	0	0	1	1	1	1	1	1	0	1	0	0	0	0	0	0	0	0
	Green(252)	0	0	0	0	0	0	0	0	1	1	1	1	1	1	1	0	0	0	0	0	0	0	0	0
	Green(252)	0	0	0	0	0	0	0	0	1	1	1	1	1	1	1	1	0	0	0	0	0	0	0	0
Gray Scale Of Blue	Blue(0) / Dark	0	0	0	0	0	0	0	0	0	0	0	0	0	0	0	0	0	0	0	0	0	0	0	0
	Blue(1)	0	0	0	0	0	0	0	0	0	0	0	0	0	0	0	0	0	0	0	0	0	0	0	1
	Blue(2)	0	0	0	0	0	0	0	0	0	0	0	0	0	0	0	0	0	0	0	0	0	0	1	0
	:	:	:	:	:	:	:	:	:	:	:	:	:	:	:	:	:	:	:	:	:	:	:	:	:
	:	:	:	:	:	:	:	:	:	:	:	:	:	:	:	:	:	:	:	:	:	:	:	:	:
	Blue(252)	0	0	0	0	0	0	0	0	0	0	0	0	0	0	0	0	1	1	1	1	1	1	0	1
	Blue(252)	0	0	0	0	0	0	0	0	0	0	0	0	0	0	0	0	1	1	1	1	1	1	1	0
	Blue(252)	0	0	0	0	0	0	0	0	0	0	0	0	0	0	0	0	1	1	1	1	1	1	1	1

NOTE(1) 0 : Low Level Voltage, 1 : High Level Voltage

6. INTERFACE TIMING

6.1 INPUT SIGNAL TIMING SPECIFICATIONS

The input signal timing specifications are shown as the following table and timing diagram.

SIGNAL	ITEM	SYMBOL	MIN.	TYP.	MAX.	UNIT	NOTE
DCLK	Pixel Clock	$1/T_C$	-	65	80	MHz	-
DE	Vertical Total Time	T_V	780	806	1200	T_H	-
	Vertical Address Time	T_{VD}	768	768	768	T_H	-
	Horizontal Total Time	T_H	1140	1344	1600	T_C	-
	Horizontal Address Time	T_{HD}	1024	1024	1024	T_C	-

NOTE(1) Because this module is operated by DE only mode, Hsync and Vsync input signals should be set to low logic level or ground. Otherwise, this module would operate abnormally.

INPUT SIGNAL TIMING DIAGRAM

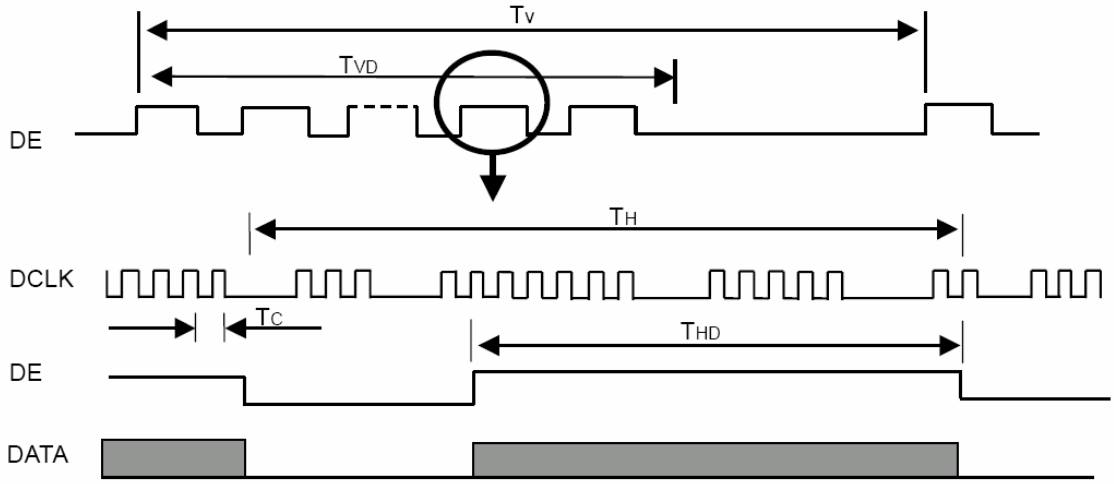

TIMING DIAGRAM of LVDS

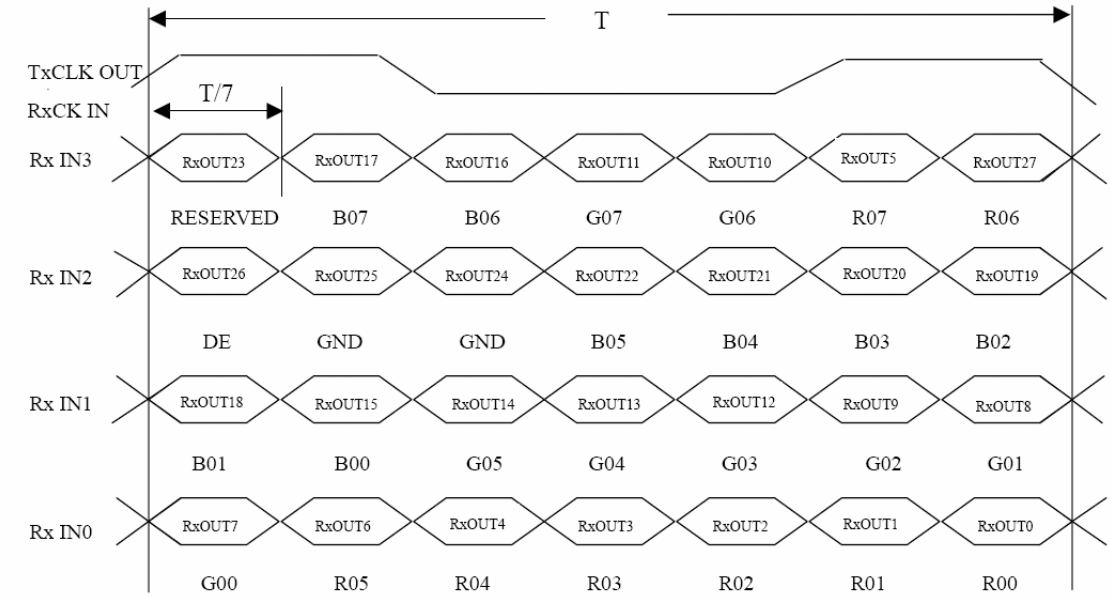

6.2 POWER ON/OFF SEQUENCE

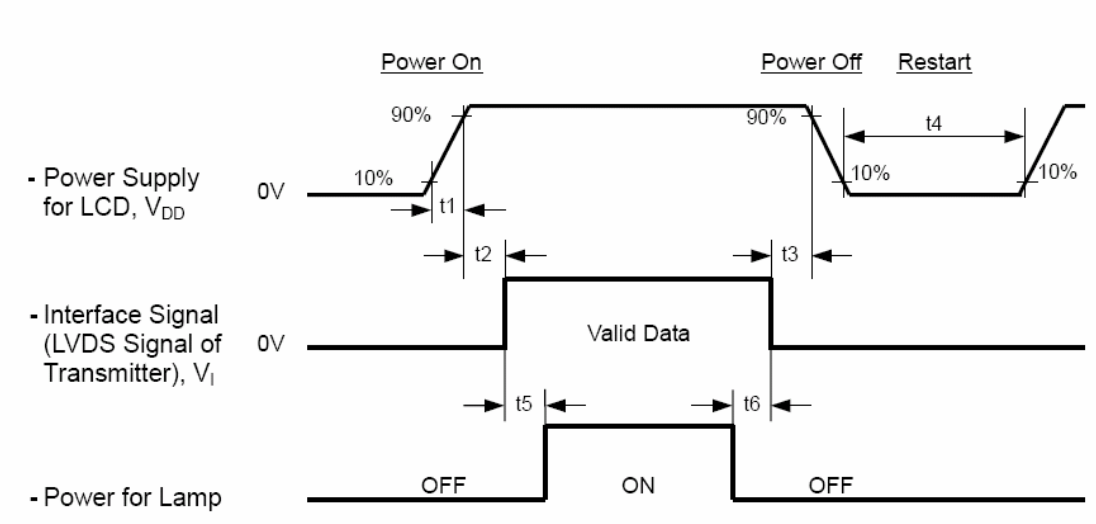

Timing Specifications :

0 .5< t1 ≤ 10 msec
0 < t2 ≤ 50 msec
0 < t3 ≤ 50 msec
t4 ≥ 500 sec
t5 ≥ 200 msec
t6 ≥ 200 msec

NOTE(1) Please avoid floating stage of interface signal at invalid period.

NOTE(2) When the interface signal is invalid, be sure to pull down the power supply of LCD V_{DD} to 0V.

NOTE(3) The Backlight inverter power must be turned on after the power supply for the logic and the interface signal is valid. The Backlight inverter power must be turned off before the power supply for the logic and the interface signal is invalid.

7. OPTICAL CHARACTERISTICS

7.1 TEST CONDITIONS

ITEM	SYMBOL	VALUE	UNIT
Ambient Temperature	T_A	25 ± 2	℃
Ambient Humidity	H_A	50 ± 10	%RH
Supply Voltage	V_{DD}	3.3	V
Input Signal	According to typical value in "3.ELECTRICAL CHARACTERISTICS"		
Inverter Current	I_L	8.0	mA

The measurement methods of optical characteristics are shown in Section 7.2. The following items should be measured under the test conditions described in Section 7.1 and stable environment shown in NOTE(4).

7.2 OPTICAL SPECIFICATIONS

ITEM		SYMBOL	CONDITION	MIM.	TYP.	MAX.	UNIT	NOTE
Contrast Ratio		CR	$\theta_X = 0°$, $\theta_\gamma = 0°$ Viewing Normal Angle	480	700	-	-	(2),(4)
Response Time		T_R		-	8	-	ms	(3)
		T_F		-	17	-	ms	
Luminance of White (Center point)		L		420	470	-	Cd/m^2	(4),(5)
White Variation		δW		-	1.25	1.4	-	(4),(5)
Color Chromaticity	Red	Rx		TYP. -0.03	0.613	TYP. +0.03	-	(1),(4)
		Ry			0.344		-	
	Green	Gx			0.302		-	
		Gy			0.567		-	
	Blue	Bx			0.144		-	
		By			0.102		-	
	White	Wx			0.313		-	
		Wy			0.329		-	
Viewing Angle	Horizontal	θ_X+	CR ≥ 10	70	80	-	Deg.	
		θ_X-		70	80	-		
	Vertical	θ_γ+		70	80	-		
		θ_γ-		70	80	-		

NOTE(1) Definition of Viewing Angle (θ_x, θ_y) :

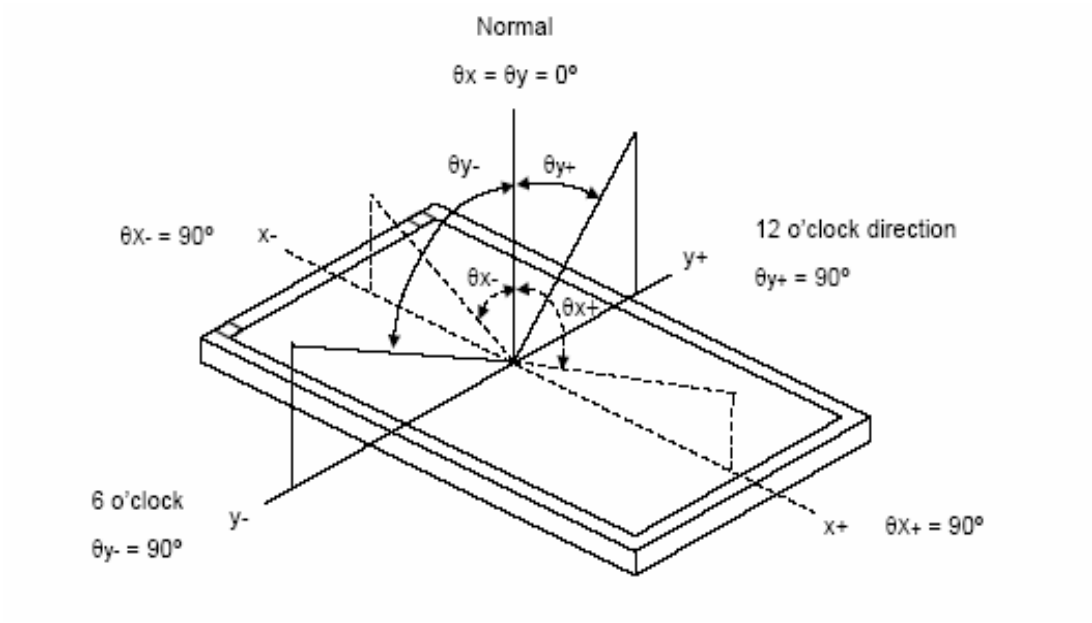

NOTE(2) Definition of Contrast Ratio (CR) :

The contrast ratio can be calculated by the following expression.

Contrast Ratio (CR) = L255 / L0

L255 : Luminance of gray level 255

L0 : Luminance of gray level 0

CR = CR (1)

CR (X) is corresponding to the Contrast Ratio of the point X at Figure in NOTE(5).

NOTE(3) Definition of Response Time (TR, T_F)

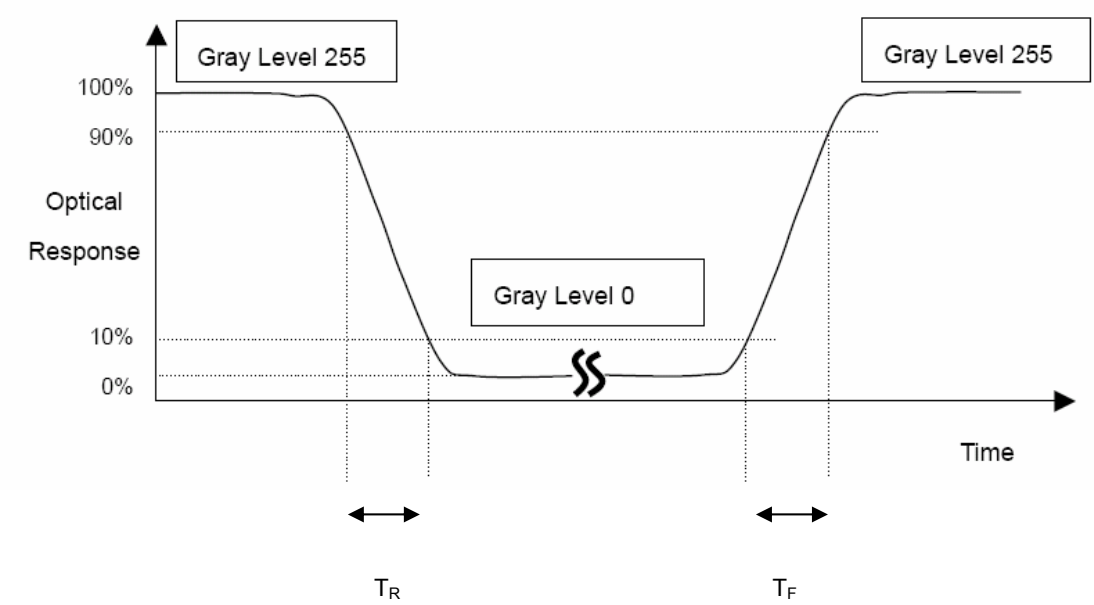

NOTE(4) Measurement Setup :

The LCD module should be stabilized at given temperature for 15 minutes to avoid abrupt temperature change during measuring. In order to stabilize the luminance, the measurement should be executed after lighting Backlight for 15 minutes in a windless room

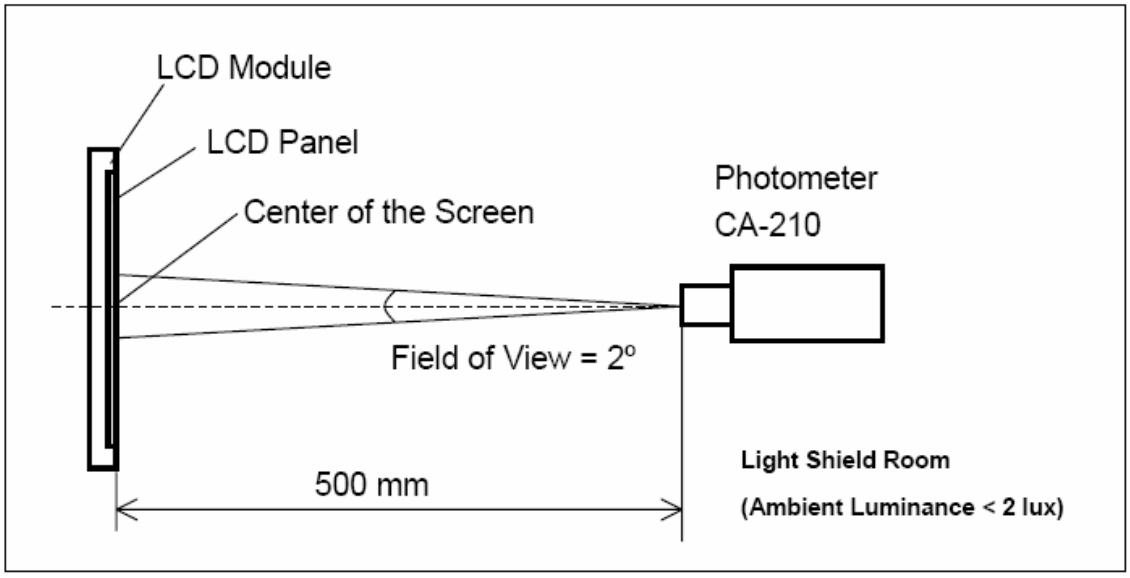

NOTE(5) Definition of luminance measured points :

Measure the luminance of gray level 255 at point L(1)

Definition of White Variation (δW) :

Measure the luminance of gray level 255 at 9 points

$$\delta W = \frac{\text{Maximum [L(1), L(6), L(7), L(8), L(9), L(10), L(11), L(12), L(13)]}}{\text{Minimum [L(1), L(6), L(7), L(8), L(9), L(10), L(11), L(12), L(13)]}}$$

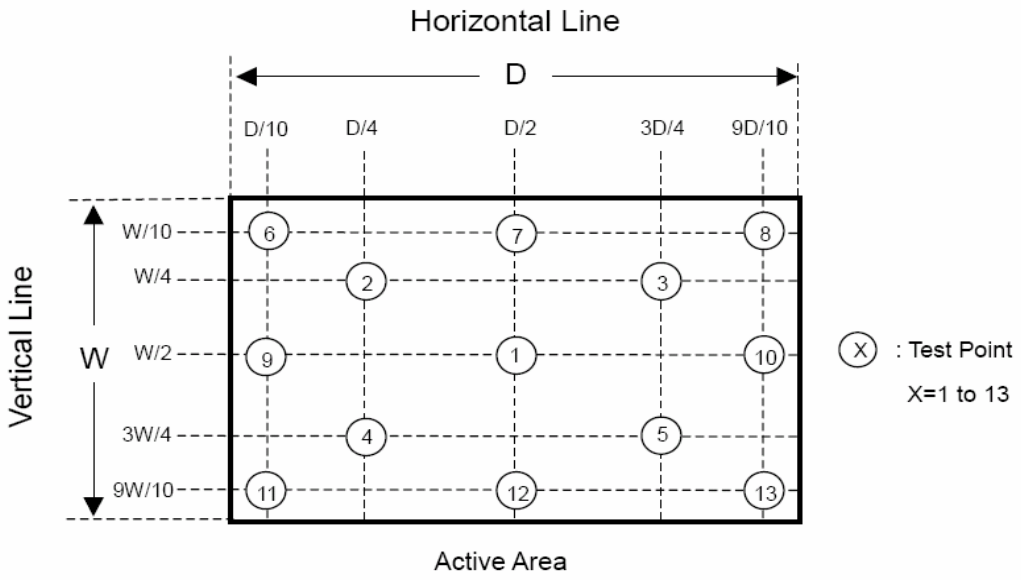

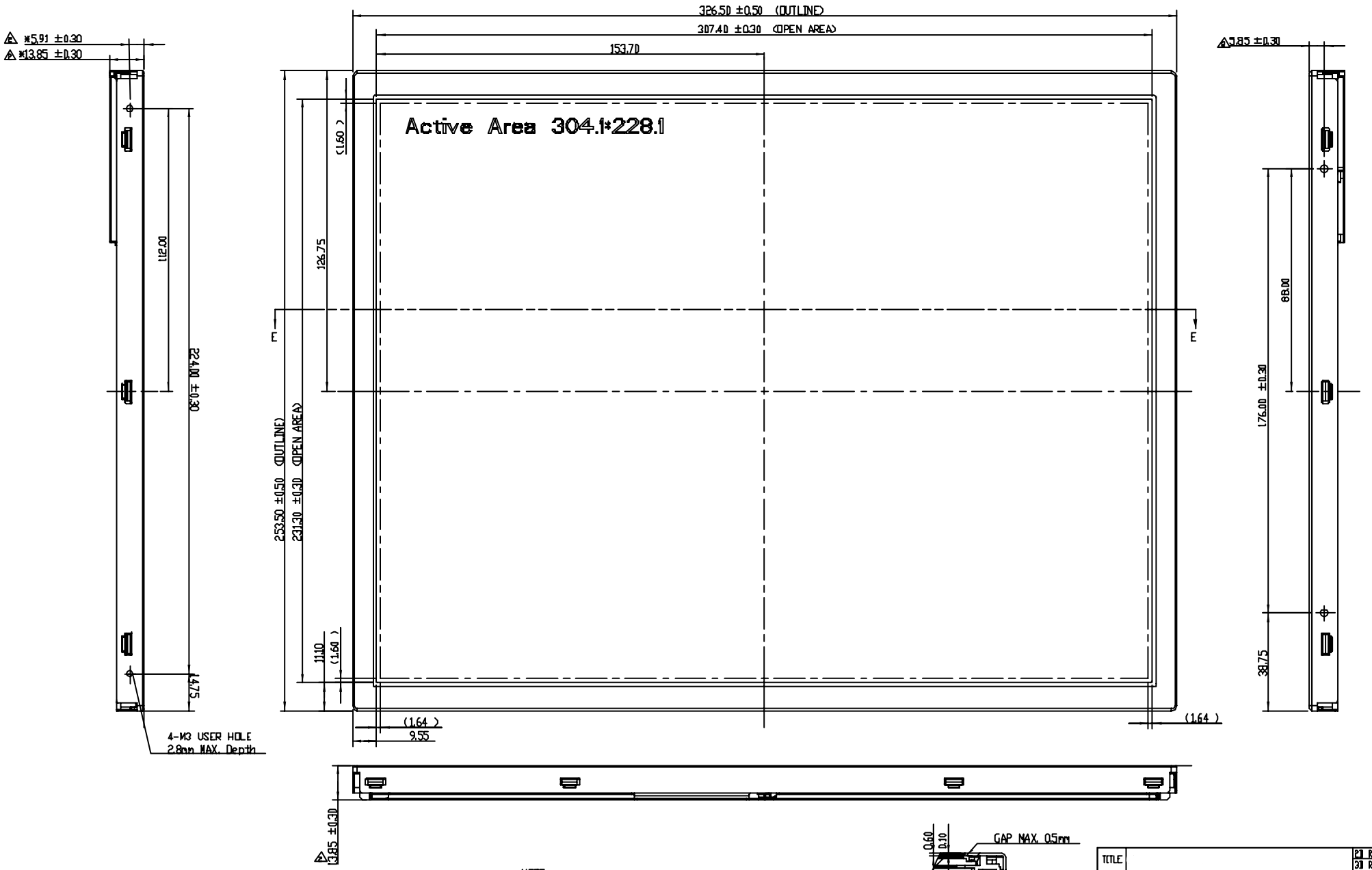

NOTE:
1.OUTLINE TOLERANCE±0.5mm.
2.I/F CONNECTOR DF14H-20P-1.25H (Hirose)
3.LAMP CONNECTOR BHR-03VS-1 (JST)
4.SIDE MOUNT HOLE ROTATIONAL TORQUE MUST BE MAX. 5kgf-cm.

Mark	Description	Date	Changed_By	Approved_By	ECN No.	Remark

TITLE			2) REV. 3) REV.
Approved		Drawing No.	
Checked		Part No.	
Drawer		Material	Sheet
Designer		Date	Scale 1:1 Unitmm

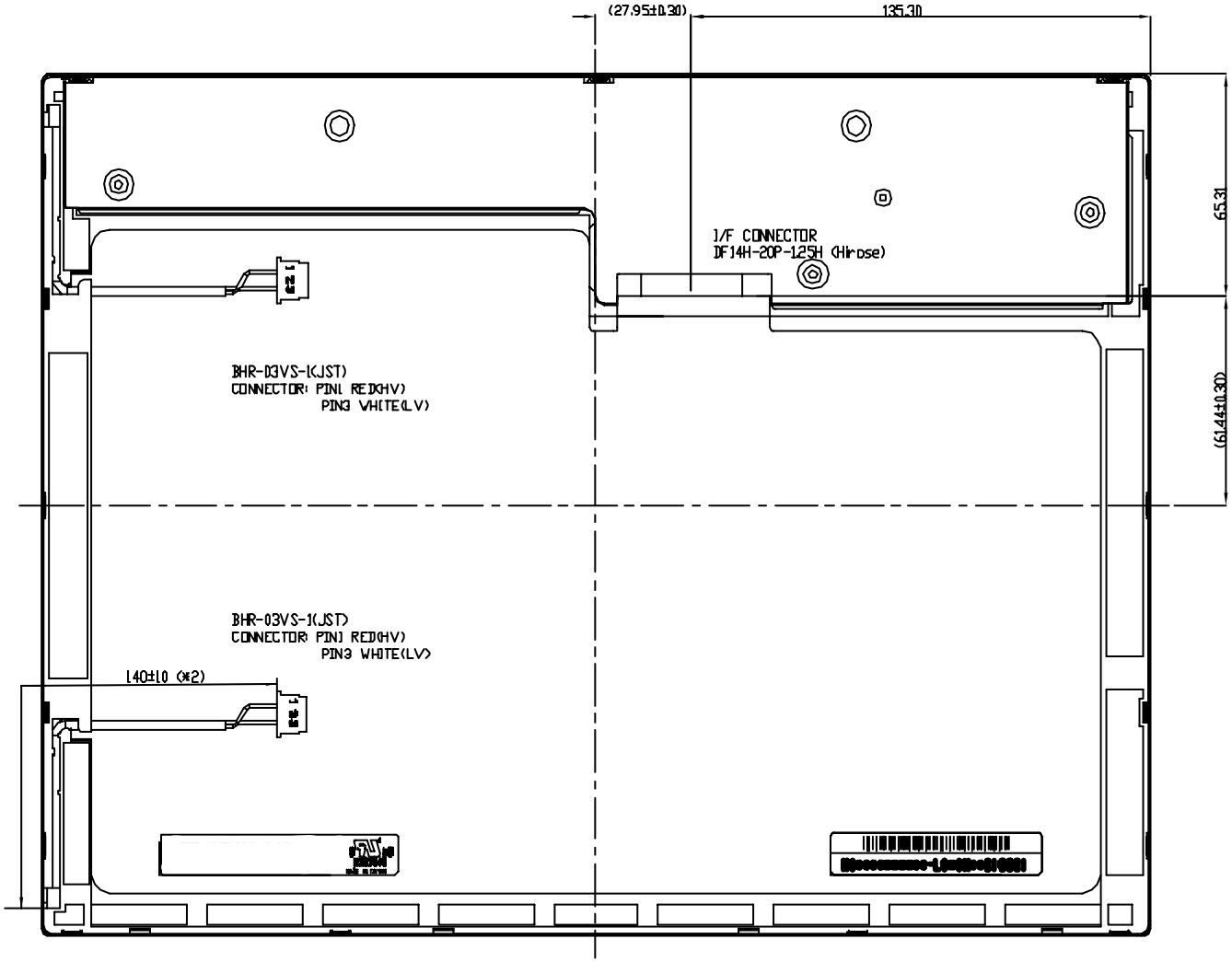

NOTE:
1.OUTLINE TOLERANCE±0.5mm.
2.I/F CONNECTOR: DF14H-20P-1.25H (Hirose)
3.LAMP CONNECTOR: BHR-03VS-1 (JST)
4.SIDE MOUNT HOLE ROTATIONAL TORQUE MUST BE MAX. 5kgf-cm.

Mark	Description	Date	Changed_By	Approved_By	ECN No.	Remark
4	1. Modify HOUSING_UP_03M1 2. Replace DIOEFX with IDEFD 3. Modify FRONT_COVER_03M0 4. Modify PCB_COVER_03M0					

TITLE				P1 REV.1 P3 REV.1	
Approved		Drawing No.			
Checked		Part No.			
Drawer		Material		Sheet	
Designer		Date		Scale 1:1	Unitrn